ATEX Float Switch
NIVOSTOP PR2/ Ex

- **For liquids in hazardous areas (ATEX)**
- **Built-in counterweight**
- **Robust floating body**
- **High quality neoprene cable**
- **Cable lengths: 10 or 20 metres**

APPLICATION

- For level monitoring in lifting and pumping systems in hazardous areas as "simple electrical equipment" in accordance with EN 60079-11

DESCRIPTION

When the level rises, the integrated switch of the float is activated. The built-in counterweight prevents the float rising up to surface and the cable wrapping around objects. The NIVOSTOP PR2/ Ex remains immersed and switches even in a small space.

The NIVOSTOP PR2-EX is a robust float switch with a large neoprene cable for difficult areas of operation.

Thanks to the incorporation of carbon black in the material, the electrostatic charges that could be created are evacuated to the outside through the ground cable.

Important: For use in Ex zones 0, 1 or 2, the use of an intrinsically safe safety barrier is mandatory.

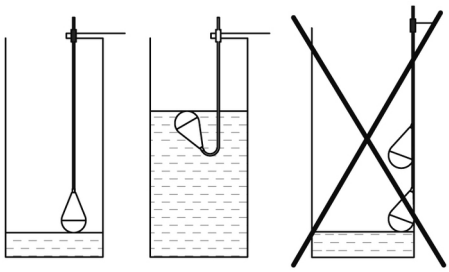

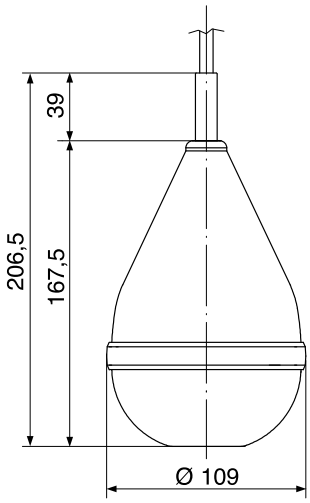

TECHNICAL DATA

Pressure limit	max. 2 bar
Protection rate	IP68
Protection class	I
Operating temperature	-20 ... +80 °C
Density limits	0.95 ... 1.05 kg/dm³
Tilting angle	20°
Switch type	Micro-switch (changeover)
Power supply	Ui= 30V, Ii= 0.1A, Pi= 0.75W
Inductance Li, capacity Ci	insignificant small
Cable	H05RN-F 4x0.75 – Ø 8,8 mm Cable lengths: 10 or 20 m
Sealing cable entry	EPDM
Body	Antistatic PP (black) Insulating envelope: 3 sealed chambers
Maximum immersion depth	20m (max.)
Ex approval number	**0425 ATEX 003942-02**
Ex marking	Ⓔx II 1G Ex ia IIC T6/T5 Ga

EC Conformity: The instrument meets the legal requirements of the current European Directives

CODE NUMBERS AND REFERENCES

Code	Reference	Cable length	Mass [kg]
521 510	NIVOSTOP PR2-EX - 10	10 m	1.9
521 520	NIVOSTOP PR2-EX - 20	20 m	2.5
Accessories: intrinsically safe power supply			
251 011C	RDN11 / 230 V AC	Power supply 230 V AC	
251 012	RDN11 / 24...48 V DC	Power supply 24 ... 48 V DC	

CITEC Pression - Température
8 Av. du Gué Langlois · 77600 Bussy-Saint-Martin
Tel **+33 (0)1 60 37 45 00** **Web** **www.citec.fr**
E-mail citec@citec.fr

Non-contractual document: Subject to amendments due to improvements